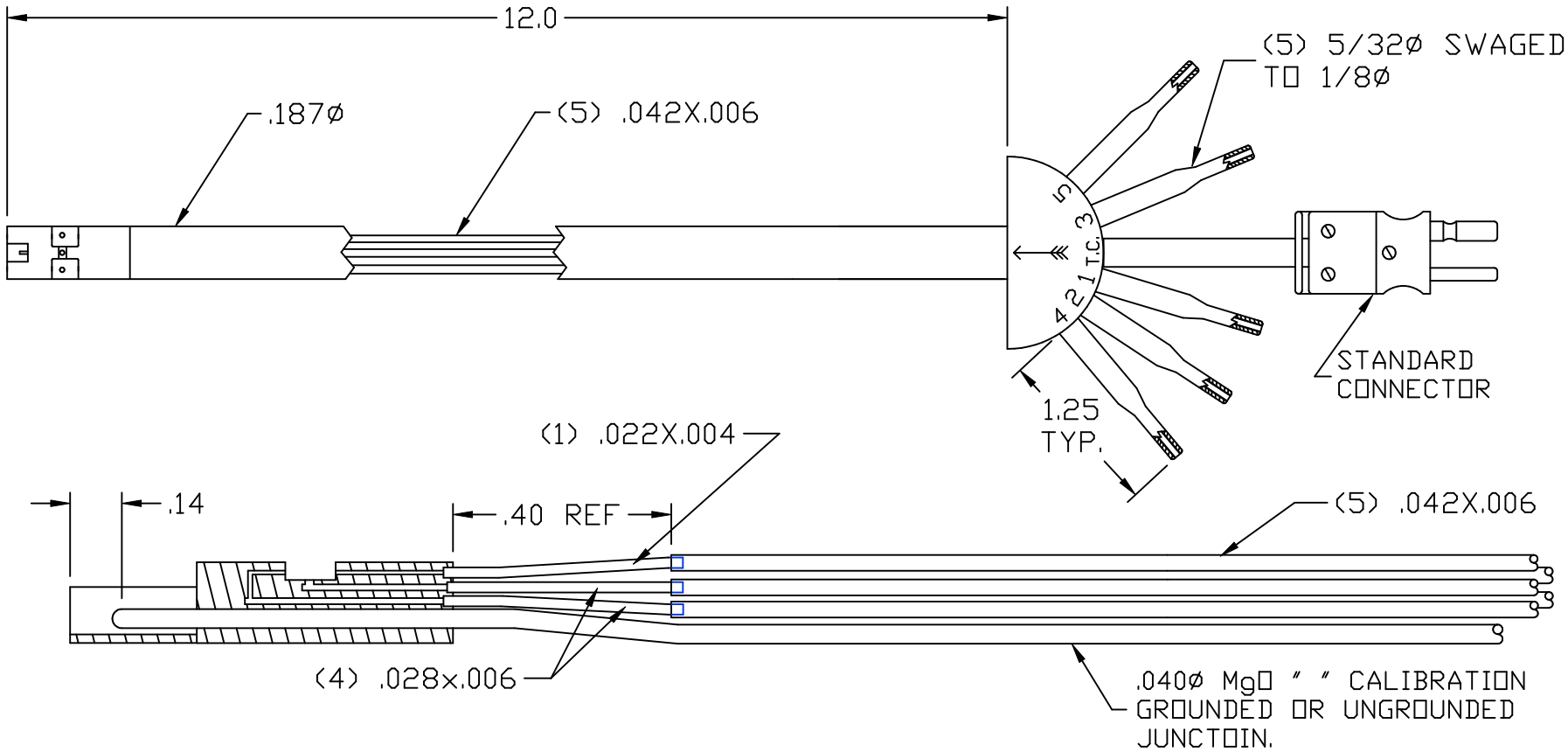

NOTES: 1. MAXIMUM TEMPERATURE 900° F

UNLESS OTHERWISE SPECIFIED:
DIMENSIONS ARE IN INCHES
TOLERANCES
DECIMALS ANGULAR
.XX ± .05 ± 0.5°
.XXX ± .010
DO NOT SCALE DRAWING

DRAWN HJW	DATE 121002	United Sensor Inc.
CHECKED		DAT-187-12-CD-" "
DESIGN		SIZE B / DWG NO. DAT-187- -CD- -PLUG CUST / REV
		SCALE — / SHEET OF

THIS DRAWING MAY BE USED IN WHOLE OR PART, PROVIDED THE AUTHORS' NAME & LOGO ARE VISIBLE IN ANY REPRODUCTION.