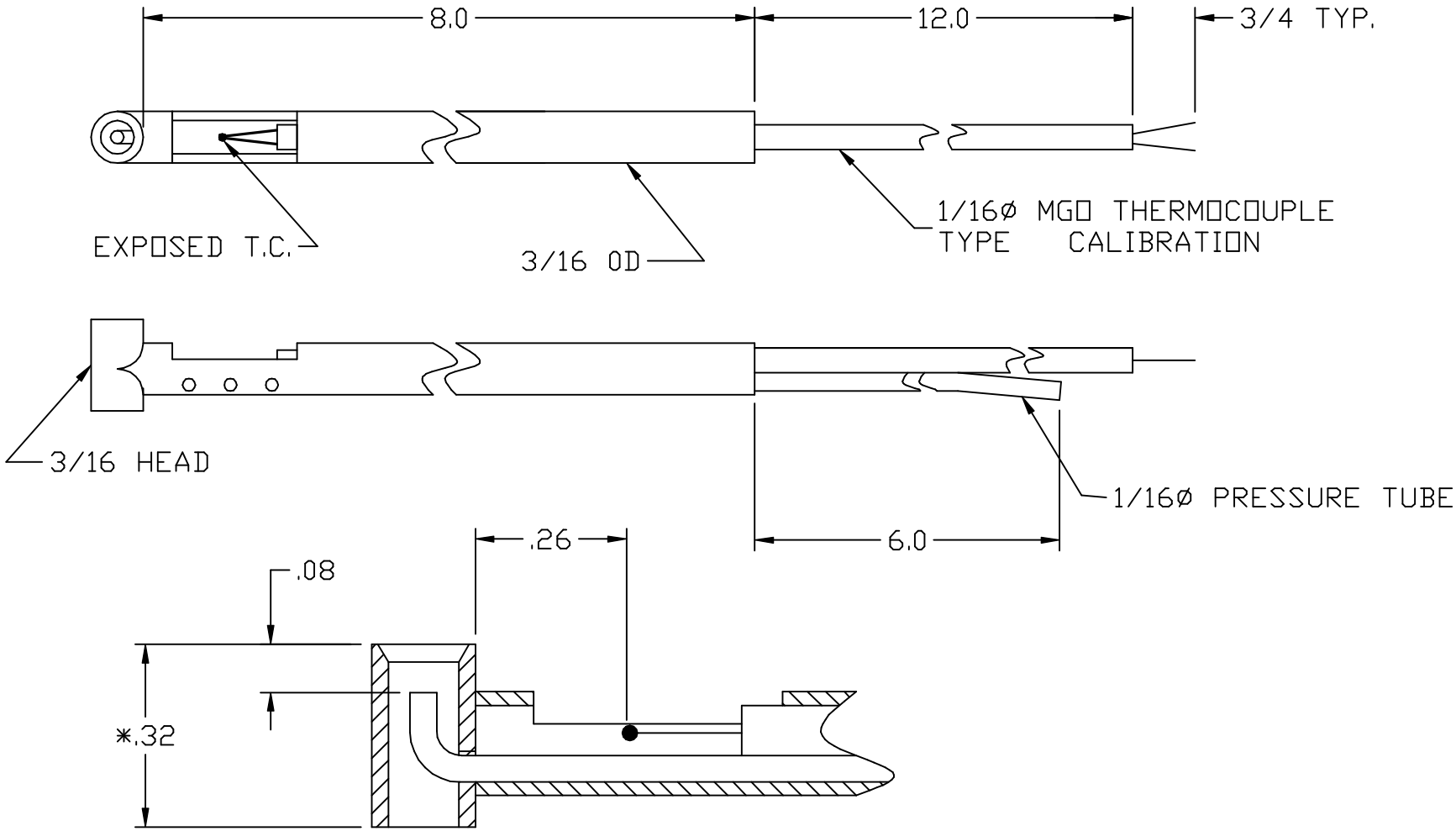

NOTES: 1. MAXIMUM TEMPERATURE 900°F
2. *MUST PASS THRU A 3/8Ø HOLE

UNLESS OTHERWISE SPECIFIED:
DIMENSIONS ARE IN INCHES
TOLERANCES
DECIMALS ANGULAR
.XX ± .05 ± 0.5°
.XXX ± .010
DO NOT SCALE DRAWING

DRAWN HJW	DATE 120202	United Sensor Corp
CHECKED		KT-8-K-12-E-EXP
DESIGN		SIZE B / DWG NO. KT- - -12-E-EXP CUST / REV
		SCALE / SHEET OF

THIS DRAWING MAY BE USED IN WHOLE OR PART, PROVIDED THE AUTHORS' NAME & LOGO ARE VISIBLE IN ANY REPRODUCTION.